DATA LOGGERS FOR TEMPERATURE AND HUMIDITY

CUSTOMIZABLE

- Supports multiple communication interfaces
- Signal acquisition, display, storage, analysis function
- Temperature and humidity upper and lower limit alarm
- Computer software is included

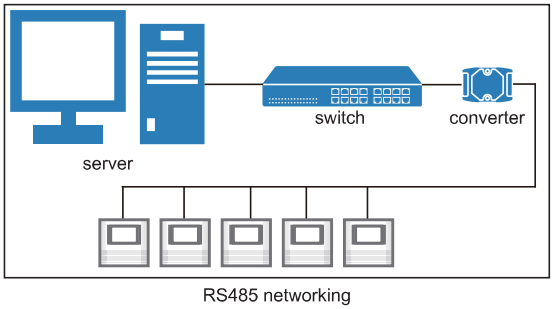

RS485 networking

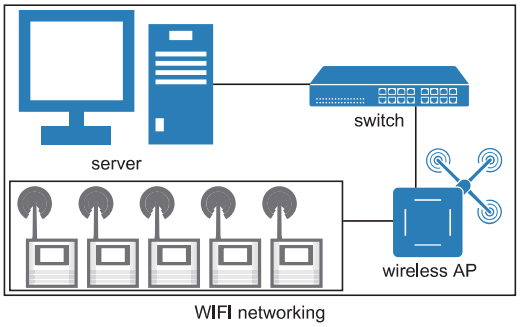

WIFI networking

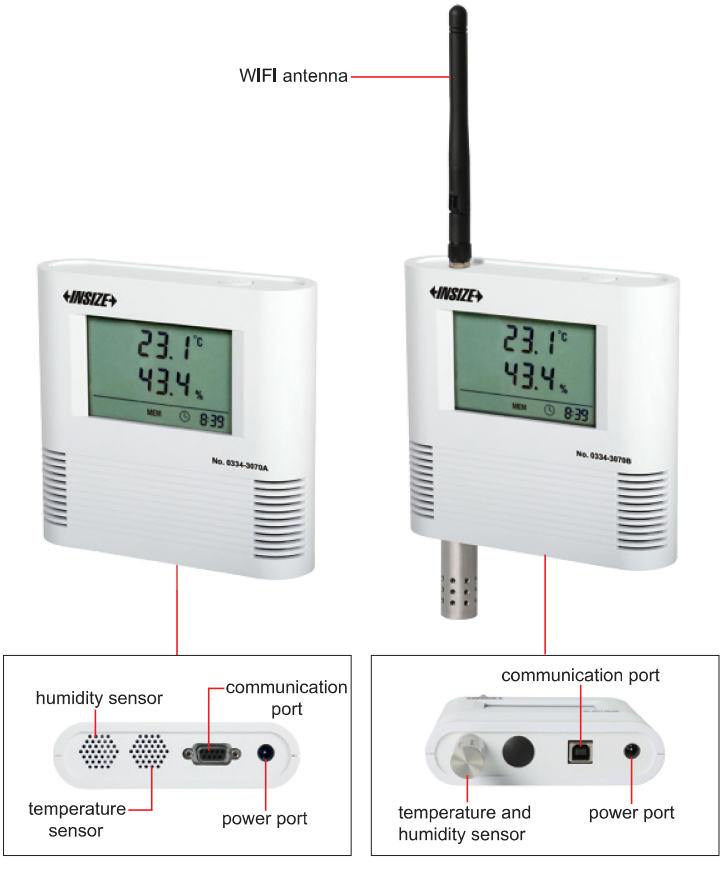

0334-3070A **0334-3070B**

SPECIFICATION

Code	0334-3070A	0334-3070R	0334-3070B	0334-3070W
Networking function	included	—	included	—
Communication	RS485	RS232	WIFI	WIFI and USB
Temperature range	-30°C~70°C/-22°F~158°F			
Temperature accuracy	±0.3°C (at 23°C±2°C), other range ±0.5°C; ±0.5°F (at 73.4°F±3.6°F), other range ±0.9°F			
Temperature resolution	0.1°C/0.1°F			
Humidity range	0%RH~100%RH			
Humidity accuracy	±3%RH (at 10%RH~85%RH, testing temperature: 23°C±2°C), other range ±5%RH			
Humidity resolution	0.1%RH			
Memory size	10918			
Alarm	sound and light			
Sampling interval	2s~255s (adjustable)			
Logging interval	2s~24h (adjustable)			
Time battery	1×3V CR2032 battery			
Power supply	1×3.6V lithium battery (ER14505) or DC 5V~24V			
Dimension (L×W×H)	123×33×117mm			
Net weight	260g		320g	

STANDARD DELIVERY

Code	0334-3070A	0334-3070R	0334-3070B	0334-3070W
Main unit	1 pc	1 pc	1 pc	1 pc
Software	1 pc	1 pc	1 pc	1 pc
Power adapter	—	1 pc	1 pc	1 pc
USB cable	—	—	1 pc	1 pc
RS485 male extension cable	1 pc	—	—	—
RS232 communication cable	—	1 pc	—	—

OPTIONAL ACCESSORY

Code	0334-3070A	0334-3070R	0334-3070B	0334-3070W
Converter (0334-C01)	1 pc	—	—	—
Sound and light alarm lamp (0334-A02)	1 pc	—	1 pc	—
Switch (0334-S03)	1 pc	—	1 pc	—
Wireless AP (0334-W04)	—	—	1 pc	—
Wireless transmitter (7315-0334)*	—	1 pc	—	—
20-meter RVVP shielded cable (0334-L20)	1 pc	—	—	—

*Receiver is needed: code **ISQ-DG8-REC**

networking version PC software (applicable only to **0334-3070A** and **0334-3070B**), download and display in real time, collect, store and analyze data

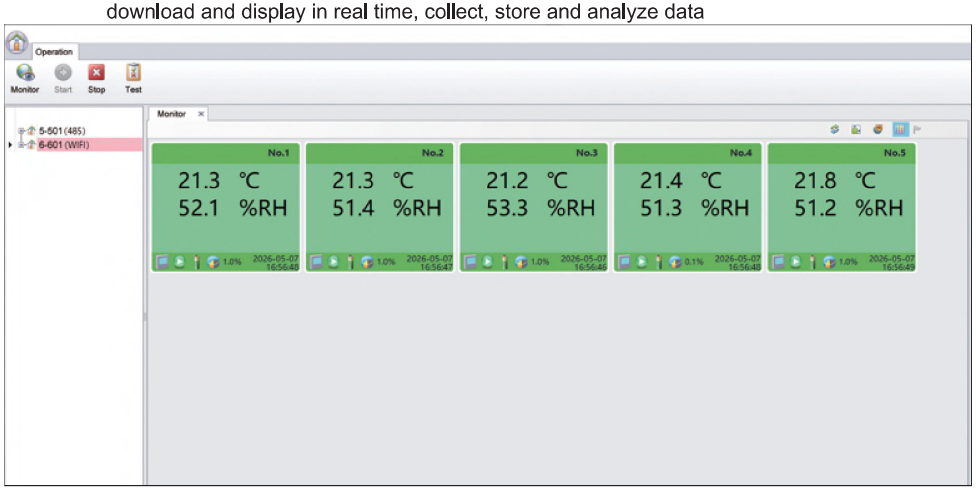



converter **(optional)**



sound and light alarm lamp **(optional)**

standalone version PC software (applicable only to **0334-3070R** and **0334-3070W**), download and display in real time, collect, store and analyze data

